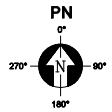

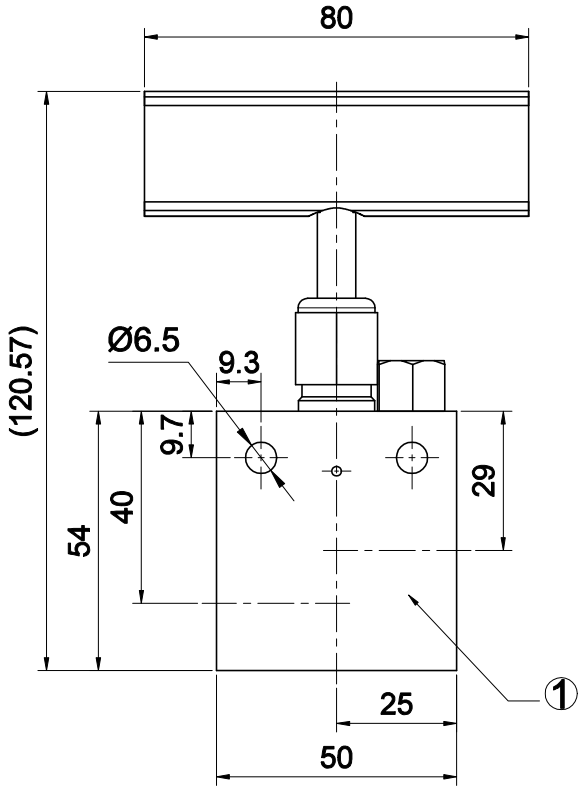

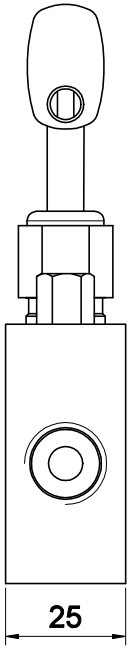

– SPECIFICATIONS

Catalog No.	Pressure Rating(PSI)	Port type	Orifice Size(ø)	Material
NVNVS06-S	15,000	3/8" NPT	5.5	STS316CW

– Note

1. All dimensions for reference only and subject to change.

REV N0.	DESCRIPTION	DRAWING	REVIEWRED BY	APPROVED BY
0	FOR APPROVAL			
		DESIGN SECTION		

Website	Main site : http://www.hiflux.com Shopping mall : http://www.hifluxmall.com						
3	-	-	-	-	-	-	-
2	-	-	-	-	-	-	-
1	NEEDLE VALVE	15,000PSI 3/8" NPT	NVNVS06-S	-	1	EA	-
ITEM	NAME OF PART	SPEC	Catalog No.	MATERIAL	QUANTITY	UNIT	REMARK
PART CODE		DESCRIPTION			FOR ONE SET		

MATERIAL LIST FOR ONE SET

No indication chamfer 0.2~0.4 X 45°

UNIT: MM

General tolerance is given in KS B ISO 2768-1

NORMINAL DIM.(MM)		
OVER	UNDER	TOL.
0.5	6	±0.1
6	30	±0.2
30	120	±0.3
120	315	±0.5
315	1000	±0.8
1000	2000	±1.2
OVER 2000		±1.5

CLASS OF FINISH

- ✓ = 50/, 200S,
- W = 12.5/, 50S,
- X = 3.2/, 12.5S,
- Y = 0.8/, 3.2S,
- Z = 0.2/, 0.8S,

PROJECT: LOW PRESSURE NEEDLE VALVE

TITLE: NEEDLE VALVE STRAIGHT

15,000PSIG 3/8" NPT

APPD BY	CHKD BY	DEsD BY	DRN BY	WORK NO.	REV. NO.
	L.S.J	L.S.J	L.S.J	HI-LSJ-220314-01	0
SCALE		DRN DATE		DWG NO.	
1:1		03, 2022		NVNVS06-S	

HiFLUX®