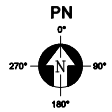

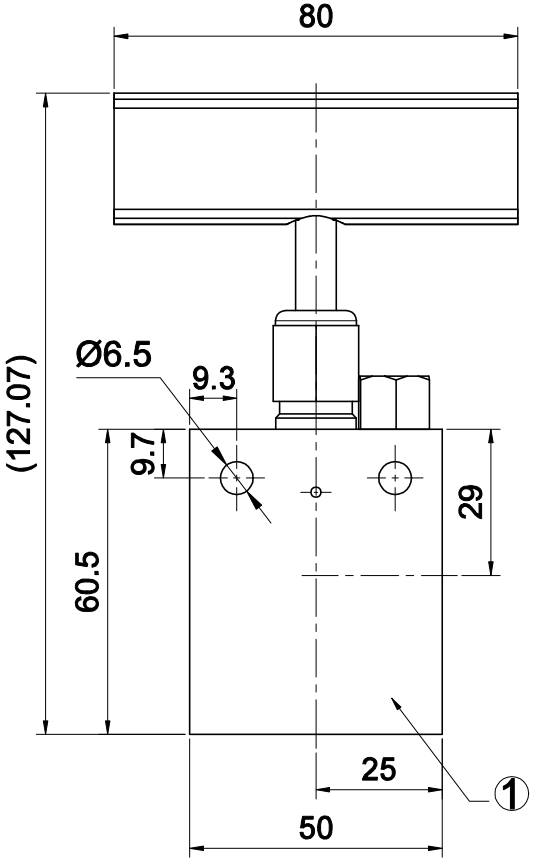

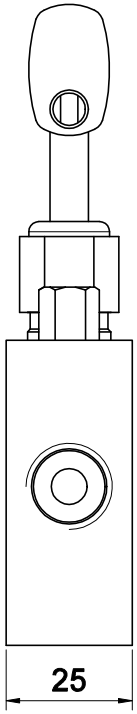

– SPECIFICATIONS

Catalog No.	Pressure Rating(PSI)	Port type	Orifice Size(∅)	Material
NVNVS06-A	15,000	3/8" NPT	5.5	STS316CW

– Note

1. All dimensions for reference only and subject to change.

REV NO.	DESCRIPTION	DRAWING	REVIEWRED BY	APPROVED BY
0	FOR APPROVAL			
		DESIGN SECTION		

Website	Main site : http://www.hiflux.com Shopping mall : http://www.hifluxmall.com						
3	-	-	-	-	-	-	-
2	-	-	-	-	-	-	-
1	NEEDLE VALVE	15,000PSI NPT 3/8"	NVNVS06-A	-	1	EA	-
ITEM	NAME OF PART	SPEC	Catalog No.	MATERIAL	QUANTITY	UNIT	REMARK
PART CODE		DESCRIPTION			FOR ONE SET		

MATERIAL LIST FOR ONE SET

No indication chamfer 0.2~0.4 X 45°

UNIT: MM

General tolerance is given in KS B ISO 2768-1

NORMINAL DIM.(MM)		
OVER	UNDER	TOL.
0.5	6	±0.1
6	30	±0.2
30	120	±0.3
120	315	±0.5
315	1000	±0.8
1000	2000	±1.2
OVER 2000		±1.5

CLASS OF FINISH

V = 6.3, 200S,
W = 12.5, 50S,
X = 3.2, 12.5S,
Y = 0.8, 3.2S,
Z = 0.2, 0.8S,

PROJECT: LOW PRESSURE NEEDLE VALVE

TITLE: NEEDLE VALVE Angle

15,000PSIG NPT 3/8"

APPD BY	CHKD BY	DED BY	DRN BY	WORK NO.	REV. NO.
	K.Y.J	K.Y.J	K.Y.J	HI-KYJ-211026-01	0
SCALE		DRN DATE		DWG NO.	
1:1		10, 2021		NVNVS06-A	

HiFLUX®